DH-IPC-MFW7449Y-Z7-T44

4+4MP Dual-Sight Polarlight Bullet WizMind Network Camera

Launched by Dahua Technology, Dahua WizMind is a full portfolio of solutions composed of project-oriented products including IPC, IVSS,NVR, PTZ, XVR, Thermal and software platform which adopts industry-leading deep learning algorithms. Focusing on customer's requirements, WizMind provides precise, reliable and comprehensive AI solutions for verticals.

Series Overview

Equipped with built-in GPU chip and dual micro PTZ, the camera can monitor panorama and details at the same time. The angles and focus length of the two lenses can be adjusted separately and remotely, which is easy for installation. With hyper DoF technology, the camera has clear image in the foreground and background. Adopting deep learning algorithm, the camera supports various functions such as perimeter protection, crowd density, face recognition, and video metadata, and more than one functions can be enabled at the same time. It is applicable to arterials, streets, alley, and entrance/exit, and more.

Functions

Time-Division Exposure

Time-Division Exposure technology ensures that when the device is taking multiple snapshots of more than one targets, the quality of the snapshots will not be affected. It can also be used to adjust the brightness, speed and more of targets, to produce high quality snapshots. It is widely used in scenes that have pedestrians and vehicles, and captures clear images of faces and license plates.

Dual Visual Angle

With the technology of Dual Visual Angle, the camera can monitor two separate scenes at the same time.

Dual Micro-PTZ

With the Dual Micro-PTZ technology, the angles of the two lenses can be adjusted physically and remotely, which is easy for installation.

Hyper DoF

With Hyper DoF technology, DoF and iris of the camera can be adjusted separately. With the largest iris, the camera can display the image of large DoF.

- 2 lenses and 2 channels are integrated into the design.
- Adopts advanced technologies such as Hyper DoF, Illumination by Area, to achieve full coverage of different speed targets with a larger DoF distance under low illumination.
- Flexible remote debugging through the Dual-micro PTZ.
- Dual channels: 4-MP 1/1.8" CMOS image sensors, low luminance, and high definition image.
- Outputs max. 4 MP (2688 × 1520)@25/30fps.
- Built-in efficient illuminator of dual light fusion, and the max. illumination distance is 150 m.
- ROI, SMART H.264+/H.265+, flexible coding, applicable to various bandwidth and storage environments.
- Multiple intelligent resources switchable.
- Channel 1: IVS, Face recognition, Face detection and Video metadata,
- Channel 2: IVS, Face recognition, Face detection, Video metadata, Crowd distribution map and People counting.
- Intelligent functions of Channel 1 and Channel 2 can be enabled at the same time.
- Hyper DoF technology: DoF and iris of the camera can be adjusted separately. With the largest iris, the camera can display the image of large DoF.
- Time-Division Exposure that when the device is taking multiple snapshots of more than one targets, the quality of the snapshots will not be affected. It can also be used to adjust the brightness, speed and more of targets, to produce high quality snapshots.
- Alarm: 7 in, 3 out; audio: 2 in, 1 out; 485; BNC; supports max. 256 G Micro SD card.
- 12 VDC power supply, easy for installation.
- IP67 protection.

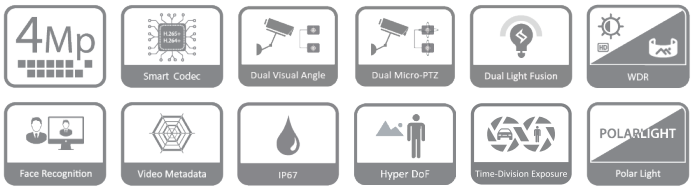

Dual Light Fusion

Dahua Dual Light Fusion technology integrates the light sources of different waves. With good illumination, it meanwhile can minimize the light pollution to avoid dazzle problem. The camera provides multiple illumination solutions to satisfy different demands.

Illumination by Area

This technology allows you to independently control the lighting in multiple areas of the image, enabling the device to easily adapt to different scenes, save power and perform more efficiently.

Cyber Security

Dahua network cameras employ a series of security technologies, including security authentication and authorization, access control protocols, trusted protection, encrypted transmission and encrypted storage. These technologies improve the camera's defense against external cyber threats and prevent malicious programs from compromising the device.

Technical Specification

Camera

Image Sensor	Channel 1: 1/1.8" CMOS Channel 2: 1/1.8" CMOS
Max. Resolution	2688 (H) × 1520 (V)
ROM	8 GB
RAM	4 GB
Scanning System	Progressive
Electronic Shutter Speed	Auto/Manual 1/3 s–1/100,000 s
Min. Illumination	Channel 1: 0.0004 lux@F1.2(Color,30IRE) 0.0001 lux@F1.2(B/W,30IRE) 0 lux (Illuminator on) Channel 2: 0.0005 lux@F1.6(Color,30IRE) 0.0002 lux@F1.6(B/W,30IRE) 0 lux (Illuminator on)
S/N Ratio	> 56 dB
Illumination Distance	Channel 1: 150 m (492.13 ft) (IR); 80 m (262.47 ft) (warm light) Channel 2: 120 m (393.70 ft) (IR); 80 m (262.47 ft) (warm light)
Illuminator On/Off Control	Auto; Manual
Illuminator Number	Channel 1: 8 (illuminator with dual light fusion) Channel 2: 2 (illuminator with dual light fusion)
Pan/Tilt/Rotation Range	Channel 1: Tilt: ±5°; Pan:±13° Channel 2: Tilt: ±15°

Lens

Lens Type	Motorized vari-focal
Lens Mount	Module
Focal Length	Channel 1: 8–56 mm Channel 2: 8–32 mm
Max. Aperture	Channel 1: F1.2 Channel 2: F1.6
Field of View	Channel 1: H: 41°–9°; V: 23°–5°; D: 47°–11° Channel 2: H: 42°–15°; V: 23°–9°; D: 49°–17°
Iris Control	Channel 1: Auto Channel 2: Auto
Iris Control Type	Channel 1: DC-Iris Channel 2: DC-Iris
Close Focus Distance	Channel 1: 1 m–2 m (3.28 ft–6.56 ft) Channel 2: 3 m–5.5 m (9.84 ft–18.04 ft)

	Lens	Detect	Observe	Recognize	Identify
DORI Distance	Channel1: W	151 m (495.41 ft)	60 m (196.85 ft)	30 m (99.41 ft)	15 m (49.54 ft)
	T	640 m (2099.74 ft)	256 m (839.90 ft)	128 m (419.95 ft)	64 m (209.97 ft)
	Channel2: W	147 m (482.28 ft)	59 m (193.57 ft)	29 m (95.14 ft)	14 m (45.93 ft)
	T	395 m (1295.93 ft)	158 m (518.37 ft)	79 m (259.19 ft)	39 m (127.95 ft)

Smart Event

IVS	Abandoned object; missing object

Intelligence

IVS (Perimeter Protection)	Intrusion, tripwire, fast moving (the three functions support the classification and accurate detection of vehicle and human); loitering detection, people gathering, and parking detection
Face Detection	Face detection; track; snapshot; snapshot optimization; optimal face snapshot upload; face enhancement; face exposure; face attributes extraction including 6 attributes (gender, age, glasses, expressions, mask, and beard) and 8 expressions (angry, sad, disgusted, scared, surprised, calm, happy, confused); face snapshot set as face or one-inch photo; snapshot strategies (real-time snapshot, quality priority and optimization snapshot); face angle filter; optimization time setting.
Face Recognition	Face detection; track; snapshot; snapshot optimization; optimal face snapshot upload; face enhancement; face exposure; face attributes extraction including 6 attributes (gender, age, glasses, expressions, mask, and beard) and 8 expressions (angry, sad, disgusted, scared, surprised, calm, happy, confused); face snapshot set as face or one-inch photo; snapshot strategies (recognition priority and optimization snapshot); face angle filter; optimization time setting. Supports adding 5 group face databases; registering person one by one or in batches; setting face similarity; and supports face comparison with the face database containing up to 100,000 face pictures.
People Counting	Tripwire people counting and people counting in area, generating and exporting report (day/month/year); queue management, generating and exporting report (day/month); 4 rules can be set for tripwire, people counting in area and queue management
Crowd Distribution Map	Crowd distribution map; global people counting; people counting in area
Video Metadata	Motor vehicle, non-motor vehicle, face, human body detection; track; snapshot; snapshot optimization; optimal face snapshot upload. Motor vehicle attributes: license plate, vehicle type, vehicle color, vehicle logo and other attributes : seatbelt, smoking, calling. Non-motor vehicle attributes: type, color, number of people, top type and color, hat. Human body attributes: gender, top/bottom type and color, bag, hat and umbrella. Face attributes: gender, age, expressions, glasses, face mask and beard.
Smart Search	Work together with Smart NVR to perform refine intelligent search, event extraction and merging to event videos

Video

Video Compression	H.265; H.264; H.264H; H.264B; MJPEG (Only supported by the sub stream)
Smart Codec	Smart H.265+;Smart H.264+
Video Frame Rate	Channel 1: Main stream: 2688 × 1520@(1-25/30 fps) sub stream: 1920 × 1080@(1-25/30 fps) third stream: 1920 × 1080@(1-25/30 fps) Channel 2: Main stream: 2688 × 1520@(1-25/30 fps) sub stream: 1920 × 1080@(1-25/30 fps) third stream: 1920 × 1080@(1-25/30 fps) *The values above are the max. frame rates of each stream; for multiple streams, the values will be subjected to the total encoding capacity.
Stream Capability	3 streams
Resolution	Channel 1/ Channel 2: 4M (2688 × 1520); 3M (2304 × 1296); 1080p (1920 × 1080); 1.3M (1280 × 960); 720p (1280 × 720)
Bit Rate Control	CBR/VBR
Video Bit Rate	Channel 1: H.264: 32 kbps–15872 kbps H.265: 12 kbps–9472 kbps Channel 2: H.264: 32 kbps–15872 kbps H.265: 12 kbps–9472 kbps
Day/Night	Auto(ICR)/Color/B/W
BLC	Yes
HLC	Yes
WDR	140 dB
Scene Self-adaptation (SSA)	Yes
White Balance	Auto; natural; street lamp; outdoor; manual; regional custom
Gain Control	Auto;Manual
Noise Reduction	3D NR
Motion Detection	OFF/ON (4 areas, rectangular)
Region of Interest (RoI)	Yes (4 areas)
Image Stabilization	Electronic Image Stabilization (EIS)
Smart Illumination	Yes
Defog	Yes
Image Rotation	0°/90°/180°/270° (Support 90°/270° with 1080p resolution and lower)
Mirror	Yes
Privacy Masking	4 areas
Time-Division Exposure	Yes

Audio

Audio Compression	G.711a; G.711Mu; PCM; G.726; G.723;

Alarm

Alarm Event	No SD card; SD card full; SD card error; network disconnection; IP conflict; illegal access; motion detection; video tampering; tripwire; intrusion; fast moving; abandoned object; missing object; loitering detection; people gathering; parking detection; scene changing; audio detection; voltage detection; defocus detection; external alarm; face detection; face recognition; video metadata; crowd density

Network

Network Port	RJ-45 (10/100/1000 Base-T)
SDK and API	Yes
Network Protocol	IPv4; IPv6; HTTP; TCP; UDP; ARP; RTP; RTSP; RTCP; RTMP; SMTP; FTP; SFTP; DHCP; DNS; DDNS; QoS; UPnP; NTP; Multicast; ICMP; IGMP; NFS; SAMBA; PPPoE; SNMP; P2P
Cyber Security	Configuration encryption; trusted execution; Digest; security logs; WSSE; account lockout; syslog; video encryption; 802.1x; IP/MAC filtering; HTTPS; trusted upgrade; trusted boot; firmware encryption; generation and importing of X.509 certification
Interoperability	ONVIF (Profile S/Profile G/ Profile T); CGI
User/Host	20
Storage	FTP; SFTP; Micro SD card (support max. 256 GB); NAS
Browser	With plug-in: IE: IE9 and later Chrome: Chrome 86 and later Firefox: Firefox 86 and later Without plug-in: Edge Chrome: Chrome 86 and later Firefox: Firefox 86 and later
Management Software	DSS Pro; DMSS
Mobile Client	iOS; Android

Function

Defog (Glass Heating)	Yes

Certification

Certifications	CE-LVD: EN62368-1; CE-EMC: Electromagnetic Compatibility Directive 2014/30/EU; FCC: 47 CFR FCC Part 15, Subpart B

Port

RS-485	1 (baud rate range:1200 bps–115200 bps)
Audio Input	2 channels (RCA port)
Audio Output	1 channel (RCA port)
Alarm Input	7 channels in: 5mA 3V–5V DC
Alarm Output	3 channels out: 1,000mA 30V DC/500mA 50V AC

Power

Power Supply	12 VDC, 4 A
Power Consumption	Basic: 11.5 W (12 VDC) Max. (ICR Switch+IR intensity): 36.1 W (12 VDC)

Environment

Operating Temperature	–30 °C to +60 °C (–22 °F to +140 °F)
Storage Temperature	–40 °C to +70 °C (–40 °F to +158 °F)

Operating Humidity	≤95%
Protection	IP67

Structure

Casing Material	Metal + plastic
Product Dimensions	483.4 mm × 197.7 mm × 178.5 mm (19.03" × 7.78" × 7.03") (L × W × H)
Net Weight	6.0 kg (13.23 lb)
Gross Weight	8.2 kg (18.08 lb)

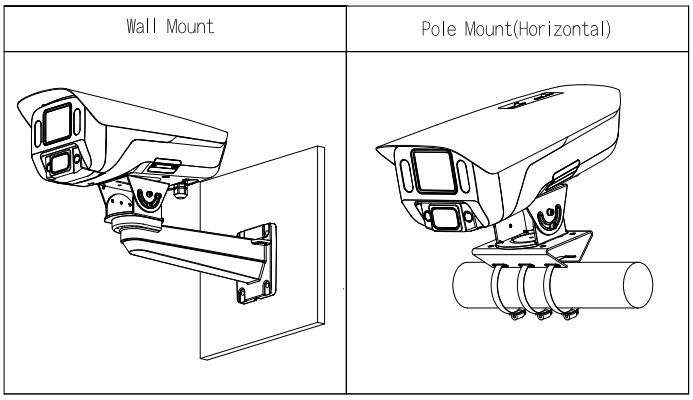

Ordering Information

Type	Model	Description
4MP Camera	DH-IPC-MFW7449Y-Z7-T44	4+4MP Dual-Sight Polarlight Bullet WizMind Network Camera
	IPC-MFW7449Y-Z7-T44	4+4MP Dual-Sight Polarlight Bullet WizMind Network Camera
Accessories (Optional)	PFA150-SG	Pole Mount Bracket
	PFA162-SG	Universal Joint
	PFB716W-SG	Wall Mount Bracket
	DC 12 V/4 A	Power Adapter
	PFM900-E	Integrated Mount Tester
	TF-P100	MicroSD Memory Card

Dimensions (mm[inch])

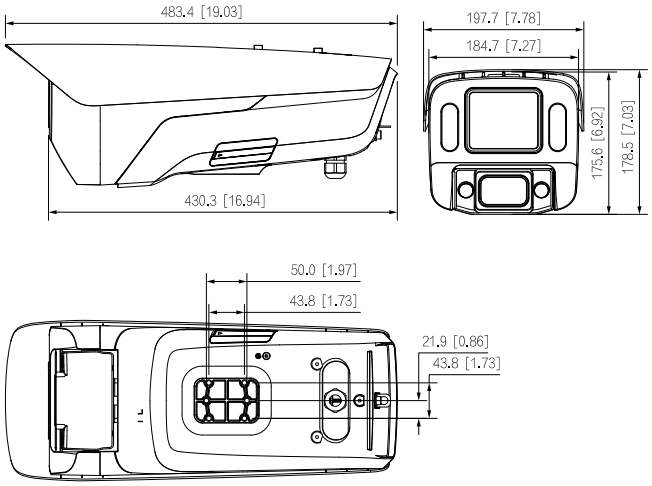

Accessories

Optional:

PFA150-SG
Pole Mount Bracket

PFA162-SG
Universal Joint

PFB716W-SG
Wall Mount Bracket

DC 12 V/4 A
Power Adapter

PFM900-E
Integrated Mount Tester

TF-P100
MicroSD Memory Card

© 2022 Dahua. All rights reserved. Design and specifications are subject to change without notice.
The images, specifications and information mentioned in the document are only for reference, and might differ from the actual product.