DHI-TPC-PT8641MA-T

Thermal Network Mini Hybrid Pan & Tilt Camera

- Vanadium oxide uncooled focal plane detector.
- 4Megapixel progressive scan CMOS.
- AI functions: face priority, heat detection, tripwire, intrusion, and human/vehicle classification.
- Temperature measurement range of –20 °C to +550 °C.
- PTZ with encoder.
- Pan: 0° to 360°, tilt: –90° to 90°.
- Wide input voltage of 10–36 VDC.
- Auto rain-sensing wiper.
- Maximum IR illumination distance is 100 m.
- IP66 rated.

Featuring thermal and visible channels, Thermal Network Hybrid Pan & Tilt Camera measures temperature through the thermal channel, with high accuracy Max (±2°C, ±2%), the camera supports multiple temperature measurement rules of spot, line and region at the same time, and generates alarm when the temperature is abnormal, which can help user find potential hazard. The image details can be confirmed by the visible channel. The PTZ with encoder keeps high precision through adjusting in real time. The camera is widely applied in the industrial scenes for temperature measurement of multiple spots.

Technical Specification

Thermal

Detector Type	Vanadium oxide uncooled focal plane detector
Effective Pixels	640 (H) × 512 (V)
Pixel Pitch	17 μm
Spectral Range	8 μm–14 μm
Sensitivity (NETD)	≤35 mK (@f/1.0)
Focal Length	7.5 mm; 13 mm; 25 mm; 50 mm
Field of View	7.5mm: H: 91.2°; V: 70.3° 13 mm: H: 48.9°; V: 38.8° 25 mm: H:24.6°; V: 19.8° 50 mm: H: 12.4°; V: 9.9°
Thermal Focus Control	Athermalized
Close Focus Distance	7.5mm: 1 m (3.28 ft) 13 mm: 2.5 m (8.2 ft) 25 mm: 10 m (32.81 ft) 50 mm: 40 m (131.23 ft)
Detection Distance①	7.5 mm: Vehicle:588 m (1929.1 ft); Human: 221m (725.1 ft) 13 mm: Vehicle: 1020 m (3,346.46 ft); Human: 382 m (1,253.28 ft) 25 mm: Vehicle: 1,961 m (6,433.73 ft); Human: 735 m (2,411.42 ft) 50 mm: Vehicle: 3,922 m (12,867.45 ft); Human: 1,470 m (4,822.83 ft)
Recognition Distance②	7.5 mm: Vehicle:147 m (482.3 ft); Human: 57m (187 ft) 13 mm: Vehicle: 255 m (836.61 ft); Human: 98 m (321.52 ft) 25 mm: Vehicle: 490 m (1,607.61 ft); Human: 189 m (620.08 ft) 50 mm: Vehicle: 980 m (3,215.22 ft); Human: 378 m (1,240.16 ft)
Identification Distance③	7.5 mm: Vehicle:74 m (242.8 ft); Human: 28m (91.9 ft) 13 mm: Vehicle: 128 m (419.95 ft); Human: 49 m (160.76 ft) 25 mm: Vehicle: 245 m (803.81 ft); Human: 95 m (311.68 ft) 50 mm: Vehicle: 490 m (1,607.61 ft); Human: 189 m (620.08 ft)

Note:
① Detection Distance: Detects objects, but cannot recognize their characteristics (objects must cover more than 3.6 pixels of the image).
② Recognition Distance: Classifies objects into general categories, such as human, vehicle (the object must cover more than 14 pixels of the image).
③ Identification Distance: Classifies objects into specific categories based on their characteristics, such as engineering truck, car (the object must cover more than 28 pixels of the image).

Digital Detail Enhancement (DDE)	Yes
Thermal Image Stabilization	Electronic Image Stabilization (EIS)
Digital Zoom	24 levels
Thermal AGC	Auto/Manual

Thermal Noise Reduction	2D NR/3D NR
Image Flip	180°
Color Palettes	18 (white hot/black hot/fusion/rainbow/golden autumn/midday/iron red/amber/jade/sunset/icefire/ painting/pomegranate/emerald /spring/summer/ autumn/winter)
Temperature Measurement Range	Low temperature mode: –20 °C to +150 °C (–4 °F to +302 °F) High temperature mode: 0 °C to +550 °C (+32 °F to +1022 °F) Auto mode: –20 °C to +550 °C (–4 °F to +1022 °F)
Temperature Measurement Accuracy	Max. (±2 °C, ±2%); Operating temperature: –20 °C (–4°F) to +60 °C (+302 °F)
Temperature Measurement Mode	Spot: 12 Line: 12 Area: 12 Supports 12 rules simultaneously

Visible

Image Sensor	1/1.8" CMOS
Max. Resolution	2688 (H) × 1520 (V)
Pixel	4 MP
Horizontal Definition	≥1200 TVL
Min. Illumination	Color: 0.001 lux@F1.4 Black & white: 0.0001 lux@F1.4 0 lux (IR on)
Visible AGC	Auto/Manual
Visible Noise Reduction	2D NR/3D NR
S/N Ratio	>55 dB
White Balance	Auto; manual; indoor; outdoor; tracking; sodium lamp; street lamp; natural
Defog	Optical defog
Electronic Shutter Speed	1 s–1/30,000 s (auto/manual)
BLC	Yes
WDR	Yes
HLC	Yes
Day/Night	Auto (ICR); Color; B/W
Iris Control	Auto
Image Flip	180°
Exposure Compensation	Yes
Visible Focus Control	Auto/semi-auto/manual
Focal Length	5.5 mm–248 mm
Field of View	H: 67.5°–1.9° V: 39.4°–1.1°
Close Focus Distance	0.5 m–2 m (1.64 ft–6.56 ft)
Illuminator On/Off Control	Auto/Manual
Illumination Distance	100 m (328.08 ft, IR)

Audio and Video

Video Compression	H.265; H.264M; H.264H; H.264B
Resolution	Thermal: Main stream: 1280 × 1024; 1280 × 720; 640 × 512; 1280 × 1024 (default) Sub stream: 640 × 512; 320 × 256; 640 × 512 (default) Visible: Main stream: 2688 × 1520; 2560 × 1440; 1920 × 1080; 1280 × 720; 704 × 576; 352 × 288; 2688 × 1520 (default) Sub stream: 1280 × 720; 704 × 576; 352 × 288; 352 × 288 (default)
Video Frame Rate	Thermal: 50 Hz: (main stream) 1 fps–25 fps adjustable, 25 fps by default; (sub stream) 1 fps–25 fps adjustable, 15 fps by default 60 Hz: (main stream) 1 fps–30 fps adjustable, 30 fps by default; (sub stream) 1 fps–30 fps adjustable, 15 fps by default Visible: 50 Hz: (main stream) 1 fps–25 fps adjustable, 25 fps by default; (sub stream) 1 fps–25 fps adjustable, 15 fps by default 60 Hz: (main stream) 1 fps–30 fps adjustable, 30 fps by default; (sub stream) 1 fps–30 fps adjustable, 15 fps by default
Audio Compression	G.711a; G.711mu; PCM
Image Encoding Format	JPEG

PTZ

Pan/Tilt Range	Pan: 0° to 360° endless Tilt: –90° to +90°
Manual Control Speed	Pan: 0.1°/s –100°/s Tilt: 0.1°/s –80°/s
Preset Speed	Pan: 0.1°/s –100°/s Tilt: 0.1°/s –80°/s
Preset	300
Tour	8 (up to 32 presets per tour)
Pattern	5
Scan	5
Power-off Memory	Yes
Privacy Masking	4 areas in the same view
Idle Motion	Preset; auto pattern; auto tour; pan; progressive scan

Function

Two-way Audio	Yes
Network Protocol	HTTP; HTTPS; TCP; ARP; RTSP; RTP; UDP; RTCP; SMTP; FTP; DHCP; DNS; DDNS; PPPOE; IPv4/v6; SNMP; QoS; UPnP; NTP; Multicast; SFTP; 802.1x
Region of Interest (RoI)	Yes
Storage	FTP; Micro SD card (optional)
Micro SD Card (Max.)	512 GB
Interoperability	ONVIF; CGI; Dahua SDK
Browser	IE: IE8 and later Chrome: 42 and earlier Firefox: 42 and earlier
User/Host	Up to 12 (total bandwidth: 64 MB)

Security	Authorized username and password; attached MAC address; encrypted HTTPS; IEEE 802.1x; controlled network access
User Management	Up to 20 users; supports multi-level user permissions (2 levels): management group and user group
Malfunction Detection	Network disconnection detection; IP conflict detection; memory card state detection; memory space detection
PIP	Yes (Intelligence automatically turns off when PIP is on)

Intelligence

Heat Detection	Yes
Cold/Hot Spot Trace	Yes
IVS (Perimeter Protection)	Yes. Supports tripwire and intrusion.
Target Distinction	Human/Vehicle Classification

Port

Analog Output	1 × CVBS output; BNC port
Network Port	1 × RJ-45 (10/100 Base-T)
Alarm Input	2
Alarm Output	2
Audio Input	1
Audio Output	1
RS-485	1

Power

Power Supply	Wide input voltage 10–36 VDC
Power Consumption	Basic: 30 W (illuminator off, heating off) Max: 43 W (illuminator on, heating off); 50 W (illuminator on, heating on)

Environment

Operating Temperature	–40 °C to +70 °C (–40 °F to +158 °F)
Operating Humidity	≤95%
Storage Temperature	–40 °C to +70 °C (–40 °F to +158 °F)

Physical Characteristics

Protection	IP66
Reliability	Surge protection: 6 kV Air discharge of 15 kV Contact discharge of 8 kV

Structure

Product Dimensions	231.3 mm × 389.7 mm × 276.9 mm (9.11" × 15.34" × 10.9") (L × W × H)
Packaging Dimensions	485 mm × 360 mm × 390 mm (19.09" × 14.17" × 15.35") (L × W × H)
Net Weight	≤9 kg (19.84 lb)
Gross Weight	≤12 kg (26.46 lb)

Heat Detection Distance

Focal Length	Max. Distance
7.5 mm	440 m (1,443.57 ft)
13 mm	780 m (2,559.06 ft)
25 mm	1,500 m (4,921.26 ft)
50 mm	3,000 m (9,842.52 ft)

Note:
The table displays the measured distances obtained from using the target size 2 m x 2 m for testing in an environment where the temperature is 23 °C and the relative humidity is below 60%.
The table is for reference only. The distances within it are subject to actual conditions including atmospheric conditions, target size, the installation site, and more.

Temperature Measurement Distance

Focal Length	Min. Distance	Max. Distance
7.5 mm	1 m (3.28 ft)	6.5 m (21.33 ft)
13 mm	2 m (6.56 ft)	11 m (36.09 ft)
25 mm	4 m (13.12 ft)	21 m (68.90 ft)
50 mm	9 m (29.53 ft)	42 m(137.80 ft)

Note:
The table displays the measured distances obtained from using the target size 0.1 m x 0.1 m for testing in an environment where the temperature is 23 °C and the relative humidity is below 60%.
The table is for reference only. The distances within it are subject to actual conditions including atmospheric conditions, target size, the installation site, and more.

Ordering Information

Type	Model	Description
Thermal Camera	DHI-TPC-PT8641MA-TB7Z45V1-BM-IR-S22	Thermal: 7.5 mm; Visible: 5.5 mm–248 mm
	DHI-TPC-PT8641MA-TB13Z45V1-BM-IR-S22	Thermal: 13mm; Visible: 5.5 mm–248 mm
	DHI-TPC-PT8641MA-TB25Z45V1-BM-IR-S22	Thermal: 25 mm; Visible: 5.5 mm–248 mm
	DHI-TPC-PT8641MA-TB50Z45V1-BM-IR-S22	Thermal: 50 mm; Visible: 5.5 mm–248 mm
Accessories (Optional)	RAW021-01	Anti-vibration Isolator

Accessories

Optional:

RAW021-01
Anti-vibration Isolator

Desk Mount	Vehicle Mount
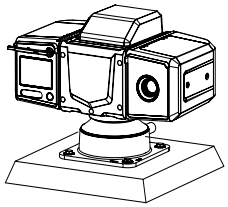	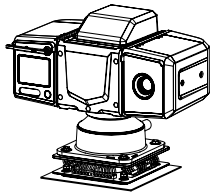

Desk Mount	Vehicle Mount
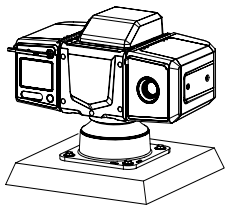	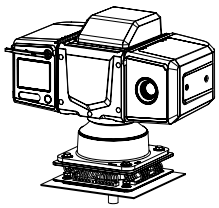

Dimensions (mm[inch])

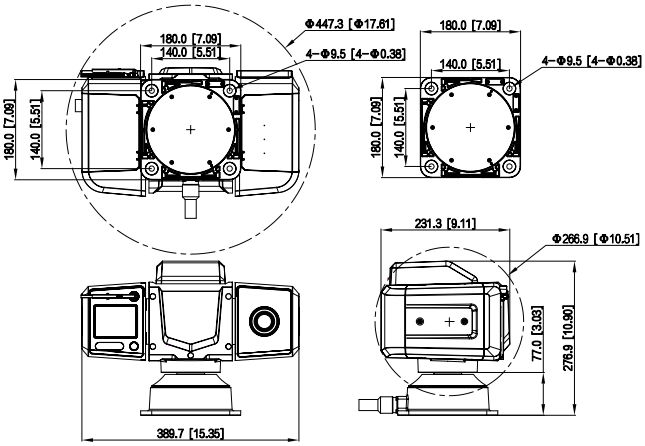

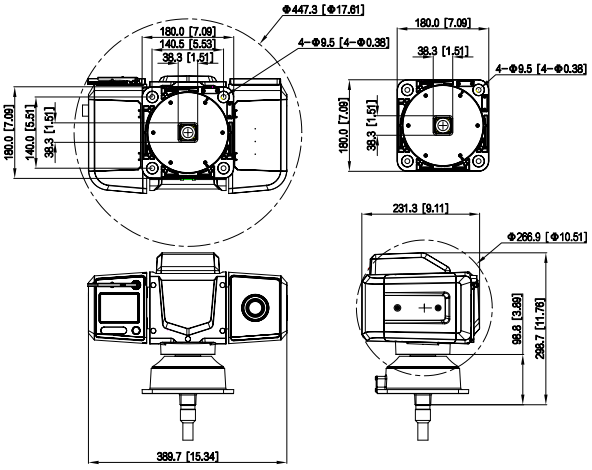

Rev 002.000 © 2022 Dahua. All rights reserved. Design and specifications are subject to change without notice.
The images, specifications and information mentioned in the document are only for reference, and might differ from the actual product.